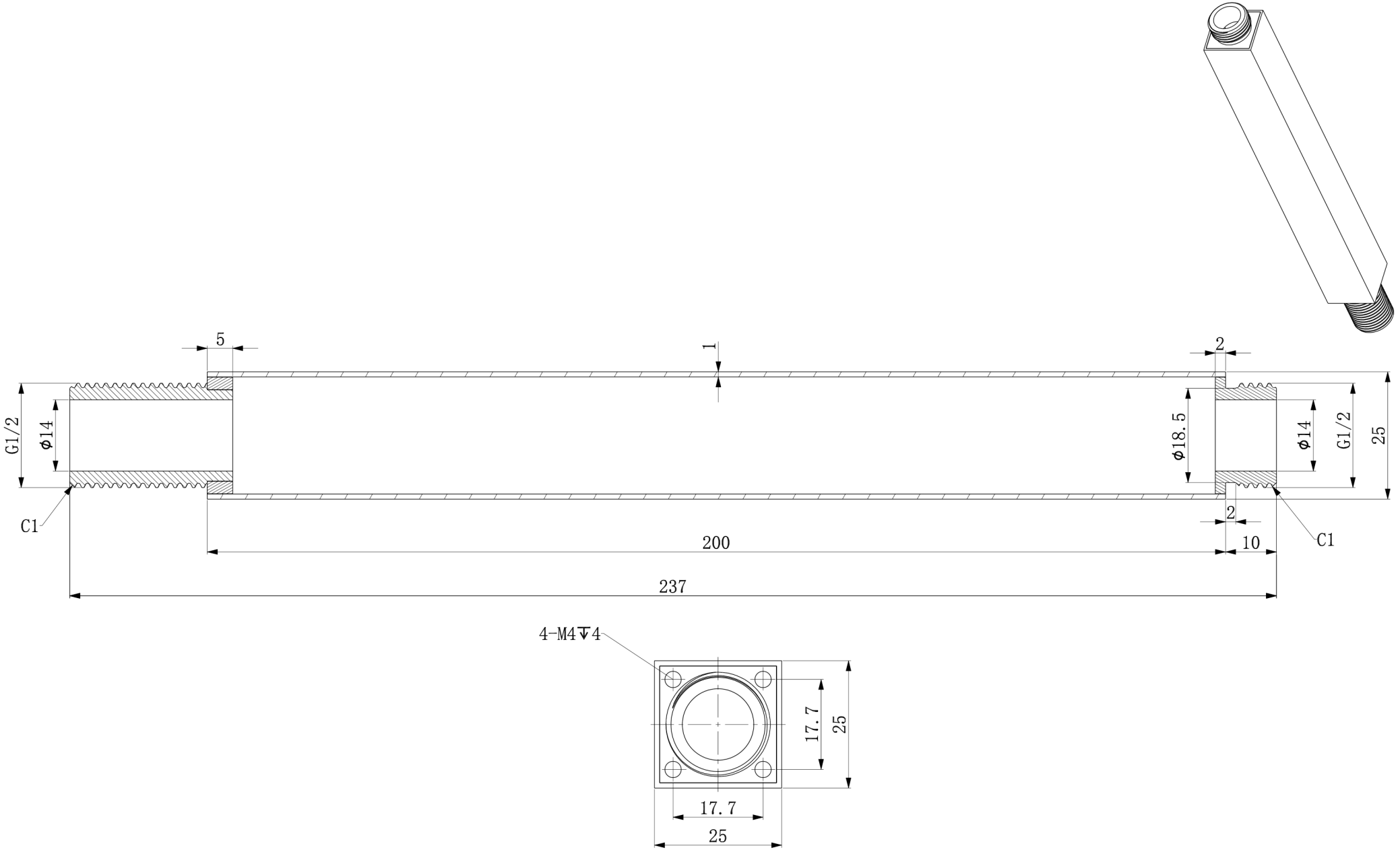
5
1
2
G1/2
ϕ14
ϕ18.5
ϕ14
G1/2
25
C1
2
C1
200
10
237
4-M4↧4
17.7
25
17.7
25